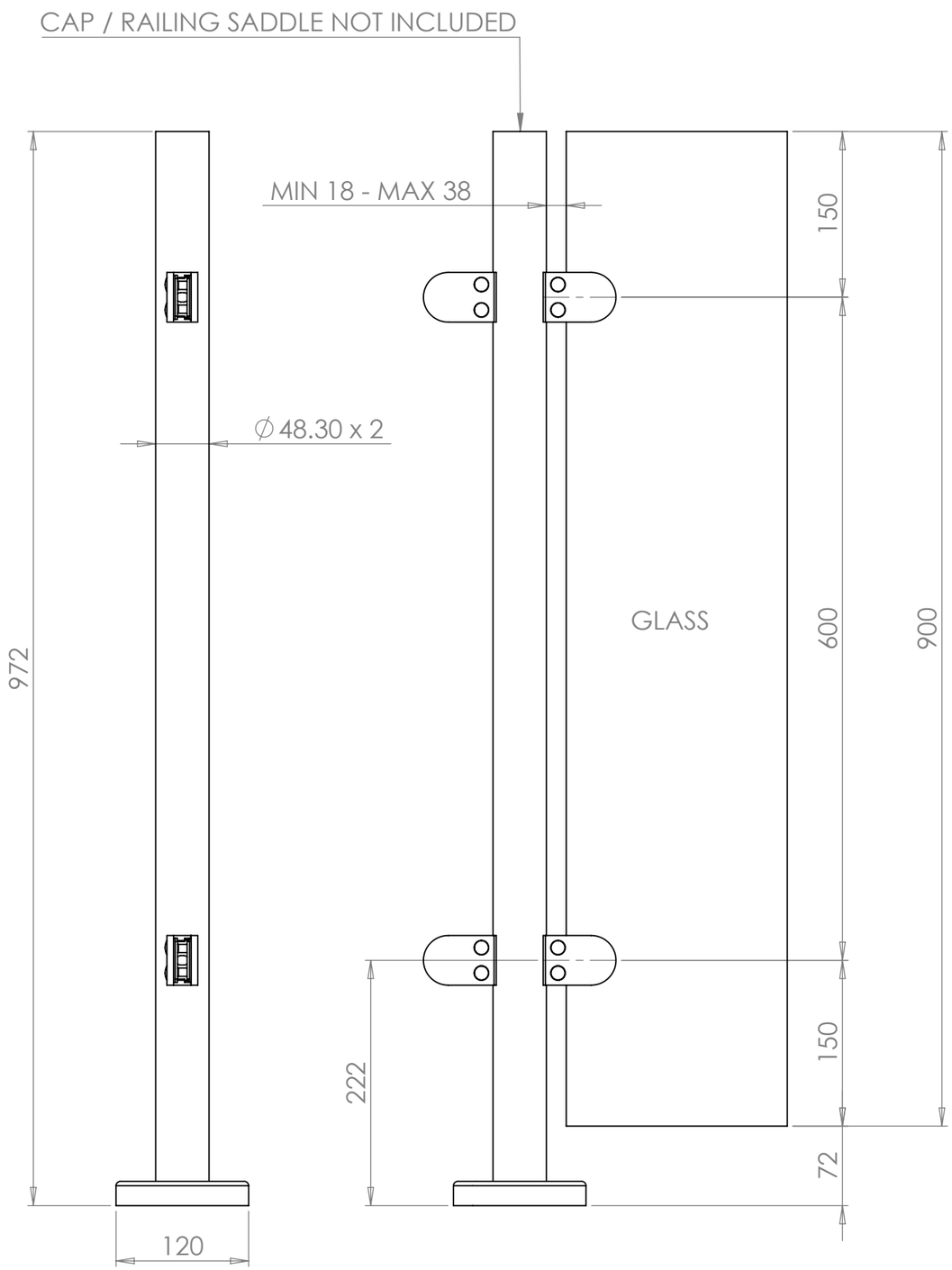

Base Plate Detail
Scale 1:2

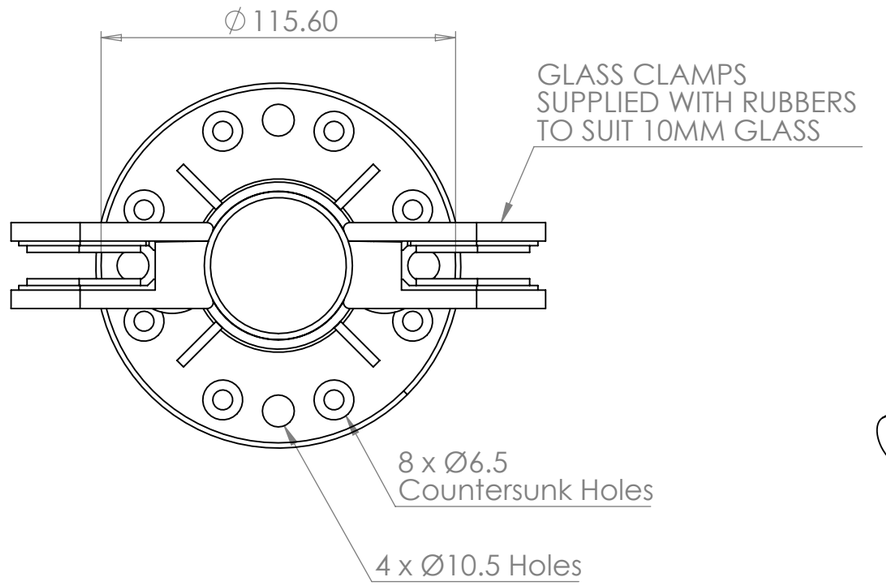

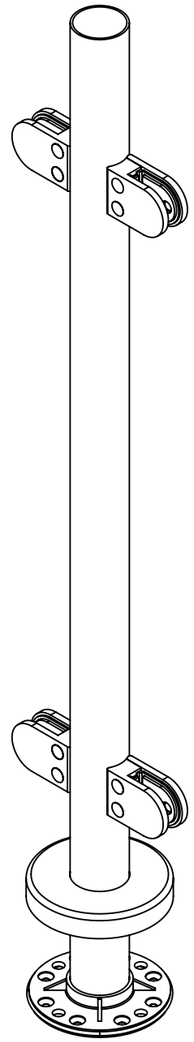

Part Code	Material	Finish	Grit Size
1804792D	304 Stainless	Satin Polished	320
1806792D	316 Stainless	Satin Polished	320

DESCRIPTION: 48.3mm Mid Post Fully Assembled - 972mm Long - Plain Top

	NAME	DATE	REVISION	UNLESS OTHERWISE SPECIFIED ALL DIMENSIONS ARE IN MILLIMETERS		A3
DRAWN	GC	12/11/2019	I			
CHECKED				DO NOT SCALE DRAWING	SCALE:1:5	