TIGER GATE CLOSER

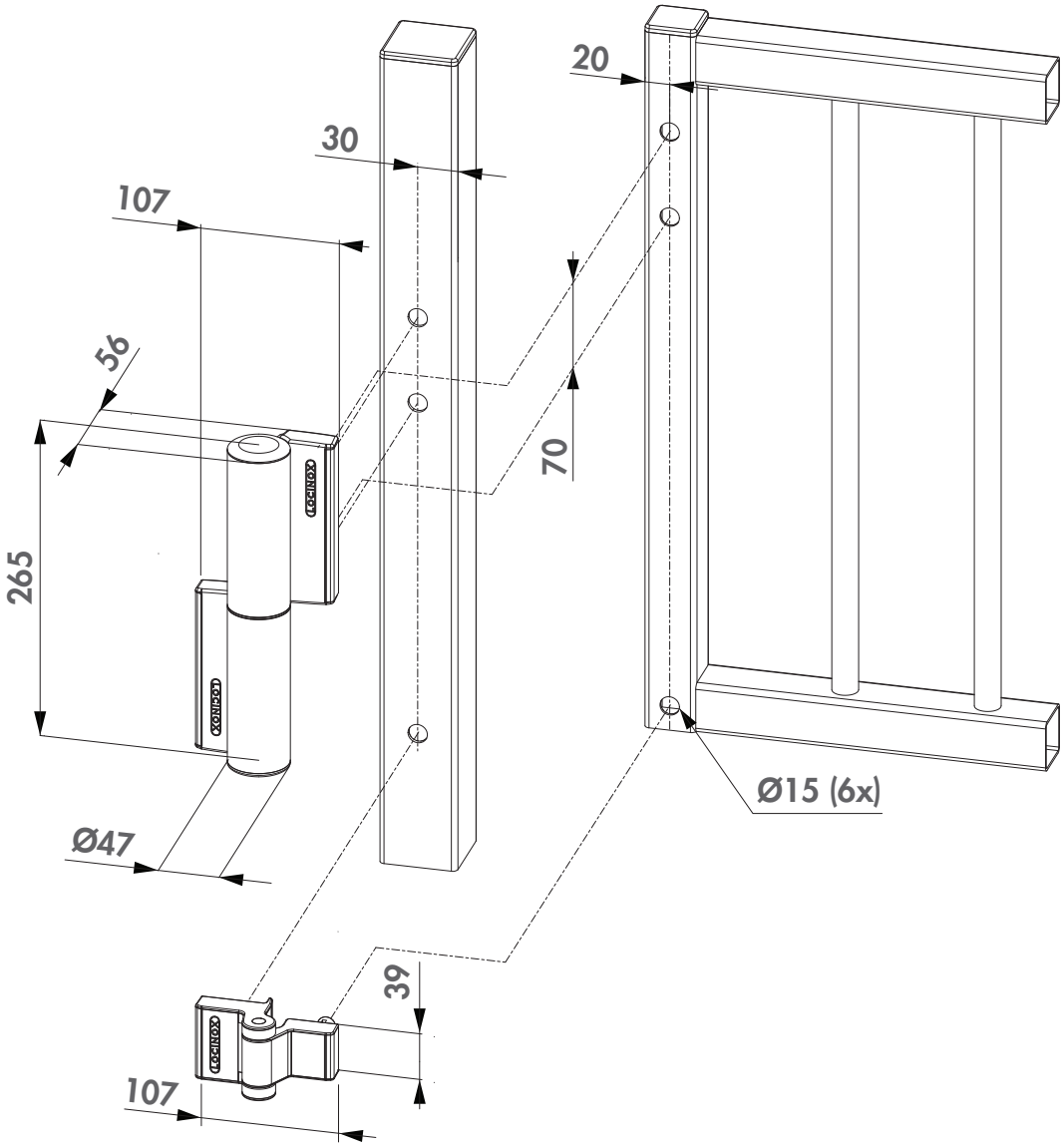

Whilst every effort has been made to ensure the accuracy of the information supplied. F.H.Brundle cannot be held responsible for any errors or omissions. This product must only be employed for its original intended use. Any other use is wrong and potentially dangerous. Installation must be carried out in full compliance with current regulations. F.H.Brundle cannot be held liable for any damages resulting from wrongful, erroneous or negligent use.